ASTON HIGH BACK ASSEMBLY INSTRUCTIONS

(1)Base	(2)GasColumn	(3)Mechanism
		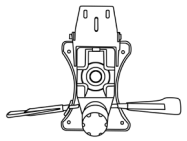
X5		
(4)Armrest	(5)Back	(6)Seat
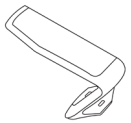 **X2**	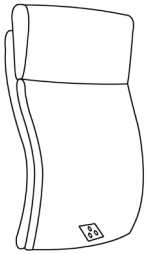	

A

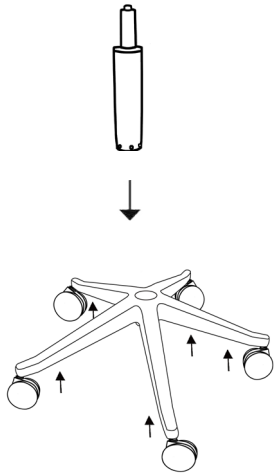

B

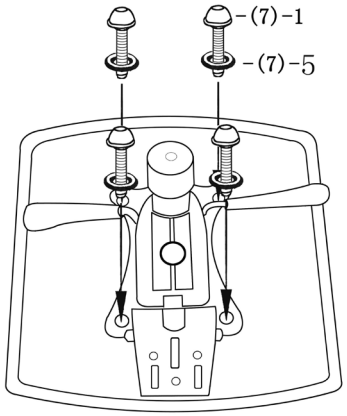

C

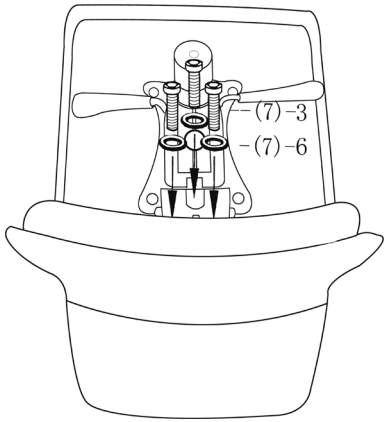

(7)Screws

1.	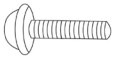	X4	6X25MM
2.		X6	6X30MM
3.	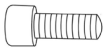	X3	8X20MM
4.		X6	6X16MM
5.		X4	6X20MM
6.		X3	8X20MM
7.	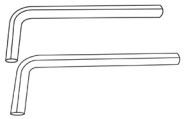	X1	5MM
8.		X1	6MM

D

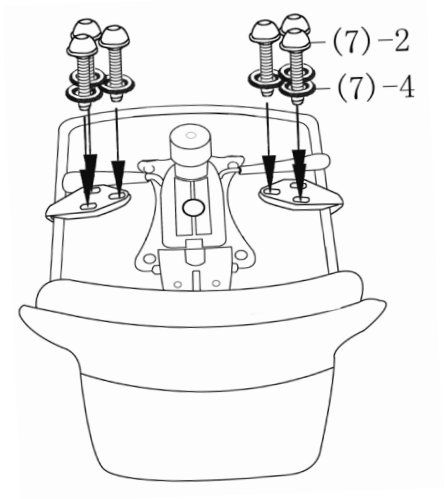

E

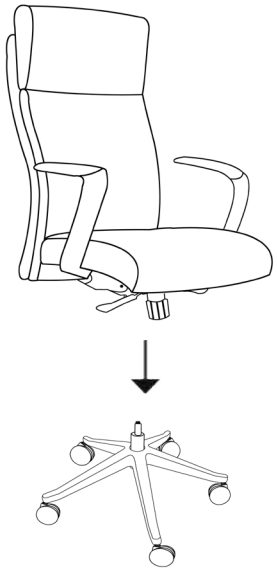
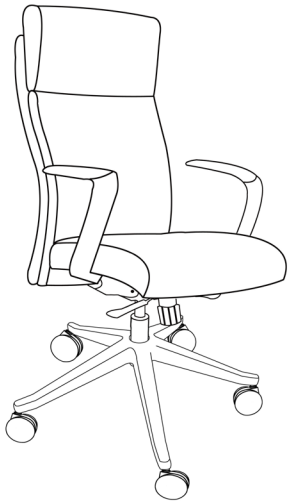
F